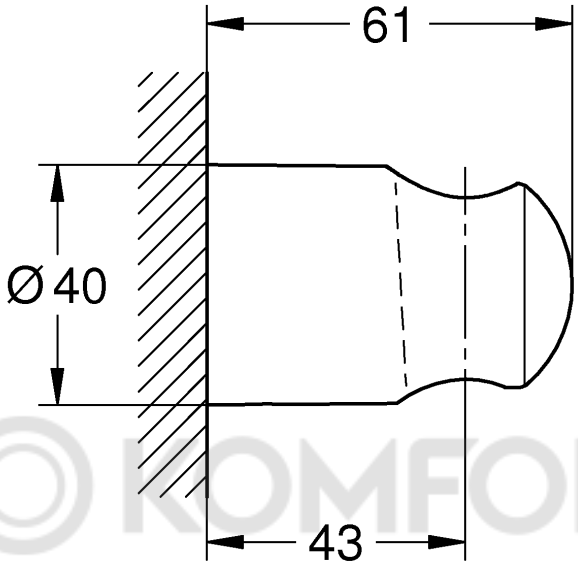
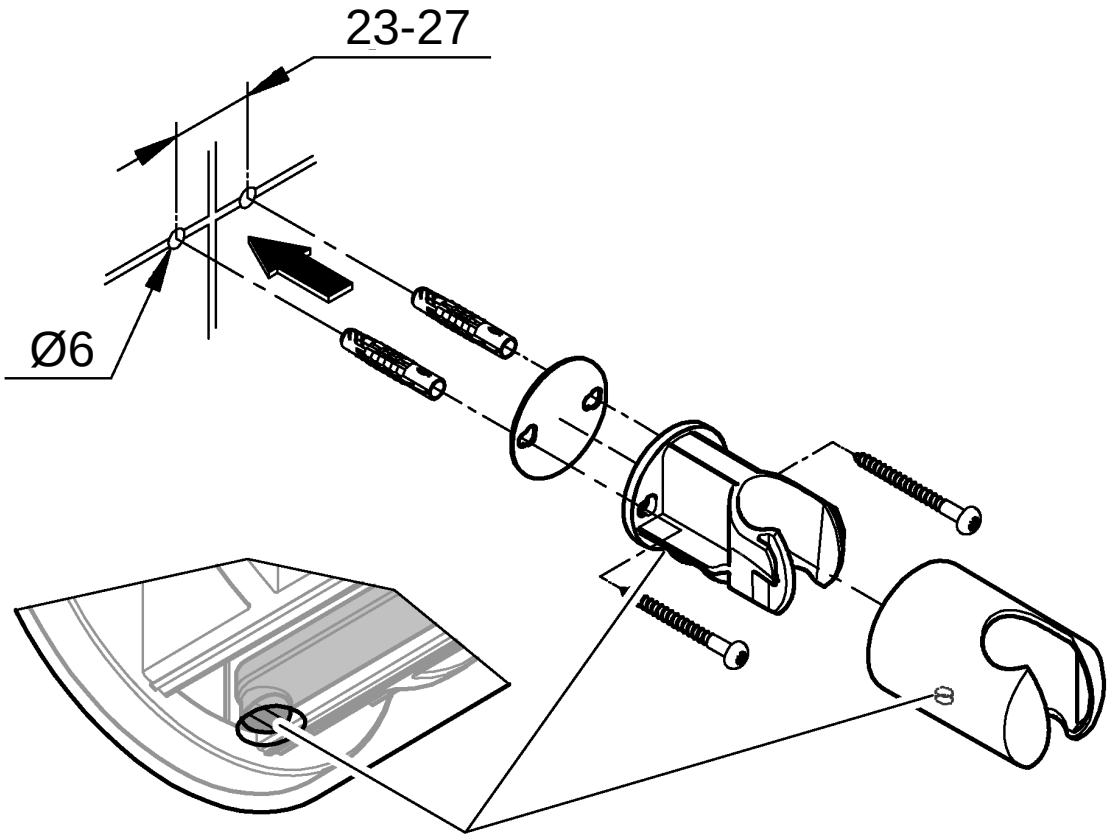
© KOMFORT